Model: **K1-SF36T**

36" Workstation Farmhouse Apron 16 Gauge Stainless Steel Single Bowl Kitchen Sink

SPEC SHEET

Features

- Premium T-304 16G Stainless Steel material
- Innovative workstation sink design
- 10” deep bowl
- Sloped bottom drain with grooves
- Round 10mm corners
- Commercial grade brushed finish
- 3.5 inch real set drain
- Extra thick 3mm rubber sound dampening pads
- Full body coated
- Bottom grids, colander, basket drainer included
- Recommended minimum cabinet size: 36”
- Limited lifetime warranty

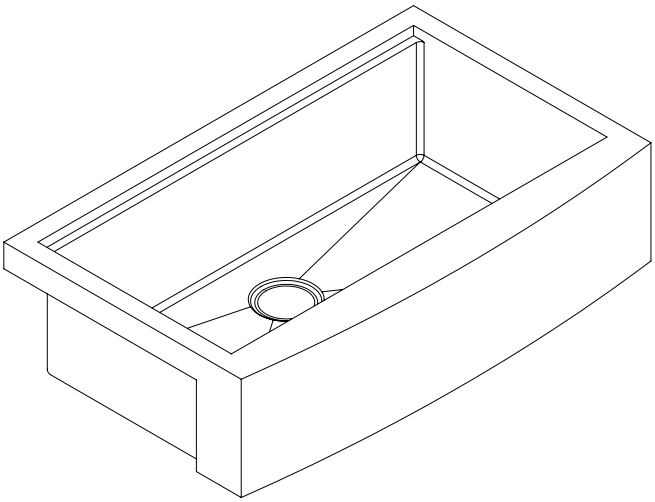

Sound Dampening

Prevents Condensation

Heat Resistant

Stain Resistant
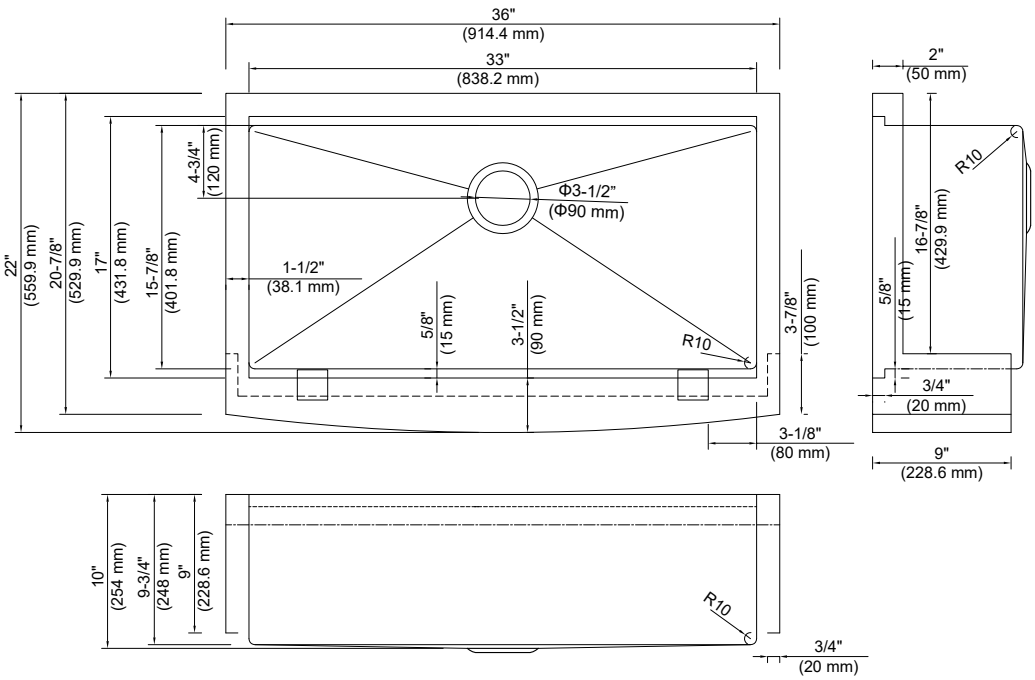
Fade Resistant